FFB LOADING BIN 8 METRIC TONNE			
No	**Description & Specification**	**Size**	**Remarks**
1	Dimension	5028mm (L) X 1587mm (W) X 1670 mm (H)	
2	Floor Plate	4mm	Adding 6 drainage holes on the trailer floor to allow water discharge.
3	Wall Plate	3mm	
4	Chasis Frame (MS Channel)	175mm x 75mm x 6mm	Chasis use 7mm
		75mm X 40mm x 4.5mm	
		100mm x 50mm x 5mm	
5	M.S ANGLE	75mm x 50mm x 4mm	
6	M. S Rectangular Hollow Sectio	75mm x 50mm X 6MM	
7	Drawbar	Ø9 ROUND BAR	
		Ø50 M.S ROUND BAR	Double weld
		Ø32 POLY SHAFT	

Notes: Drawbar equipped with towing eye. Suitable for towing by tractor or light truck. Heavy-duty design for bulk materials (sand, stone, palm fruit, soil)



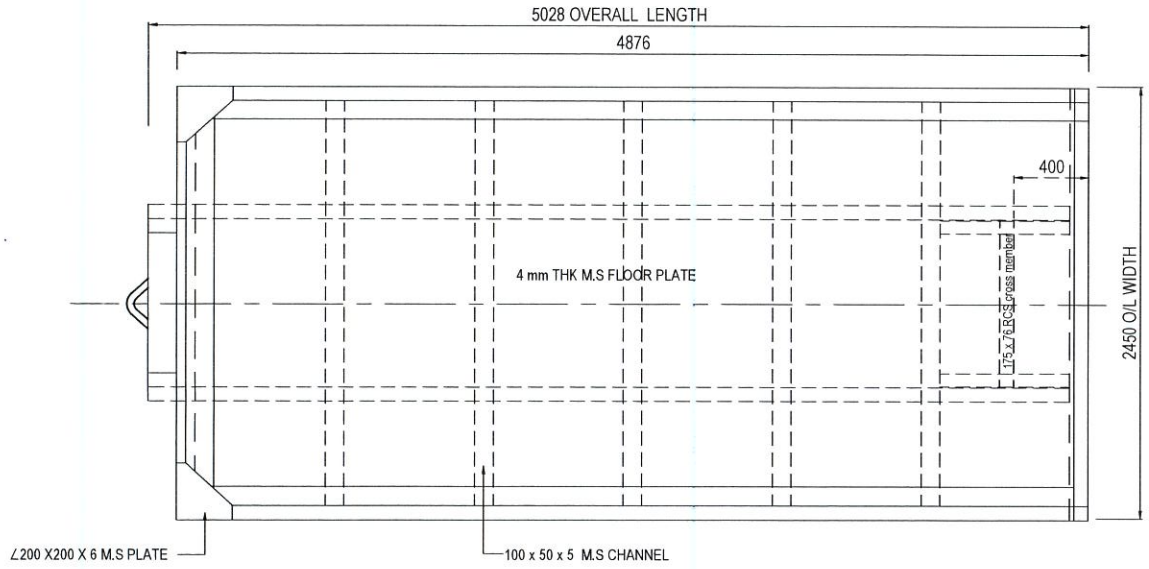

PELAN

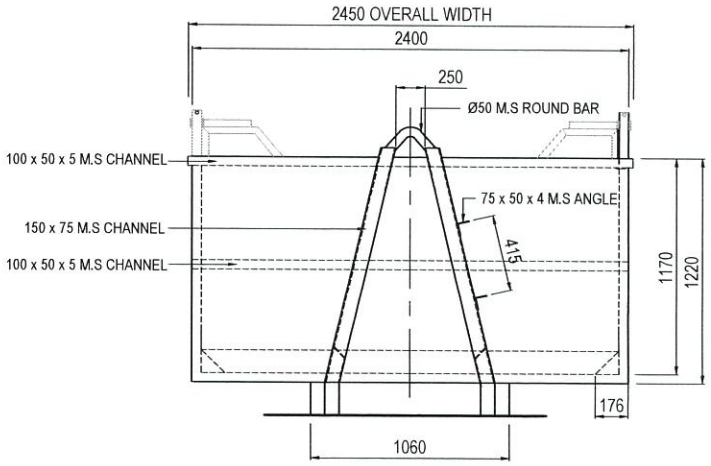

PAND. DEPAN

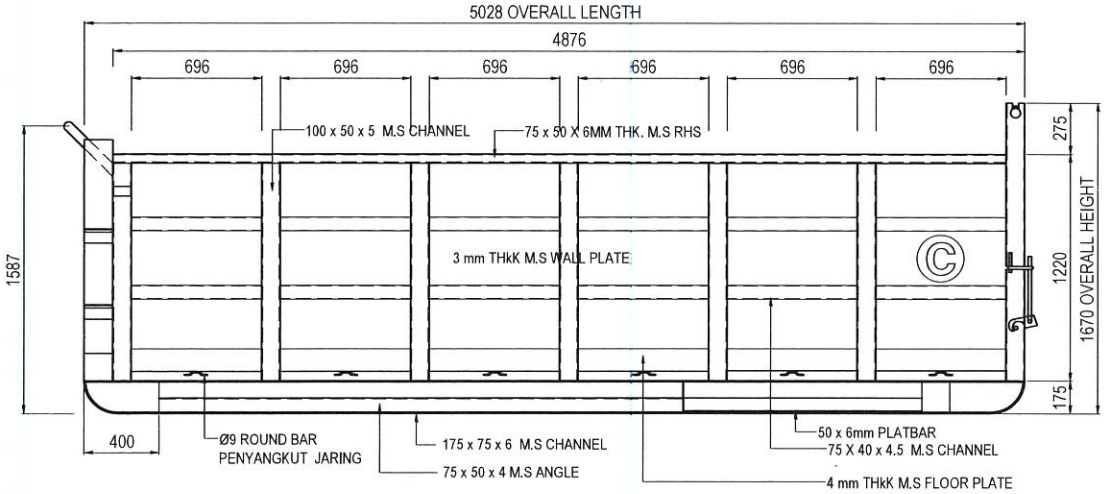

PAND. SISI

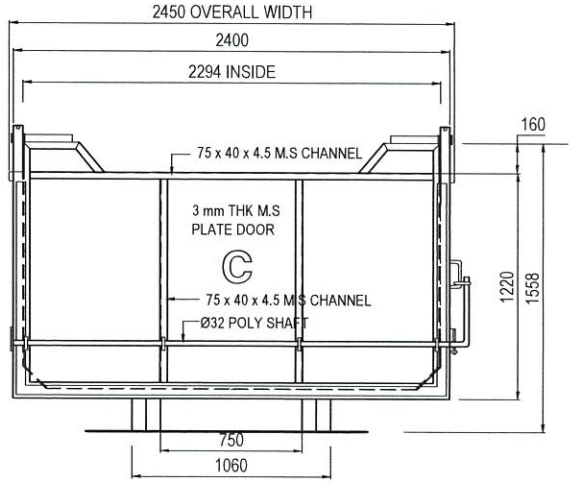

PAND. BELAKANG