PROPOSED FERTILIZER TRAILER 5 METRIC TONNE			
No.	**Description & Specification**	**Size**	**Remarks**
1	Dimension	4657 mm (L) X 2286 mm (W)	
2	Floor Plat STAINLESS .STEEL	3mm	
3	RSC (Rectangular Steel Column)	150mm x 75 mm	
4	RCS (Rectangular Steel Section)	100mm X 50mm	
5	RCS (Rectangular Steel Section)	150mm x 75 mm	
6	RCS (Rectangular Steel Section)	100mm X 50mm	
7	M.S hollow	75mm X 40mm X 3mm	
8	Hollow	100mm X 50mm X 4.5mm	
9	M.S ANGLE	50mm X 50mm X 3mm	
10	M.S PLATE	3mm	
11	M.S ANGLE HEAD BOARD	50mm X 50mm	
12	Tires	7.50 X 16PR	
13	Others	Adjustable Stand	
		Toweye	





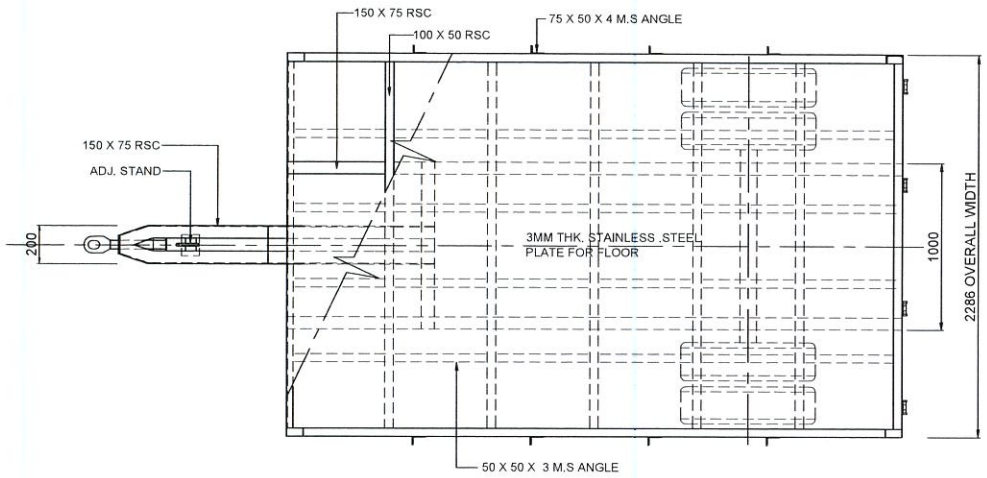

PLAN

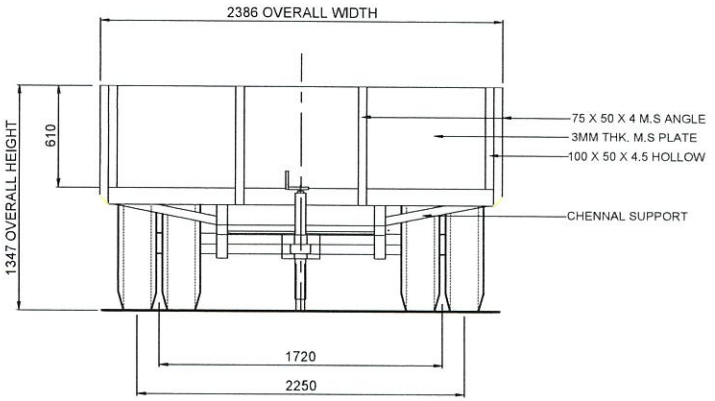

FRONT VIEW

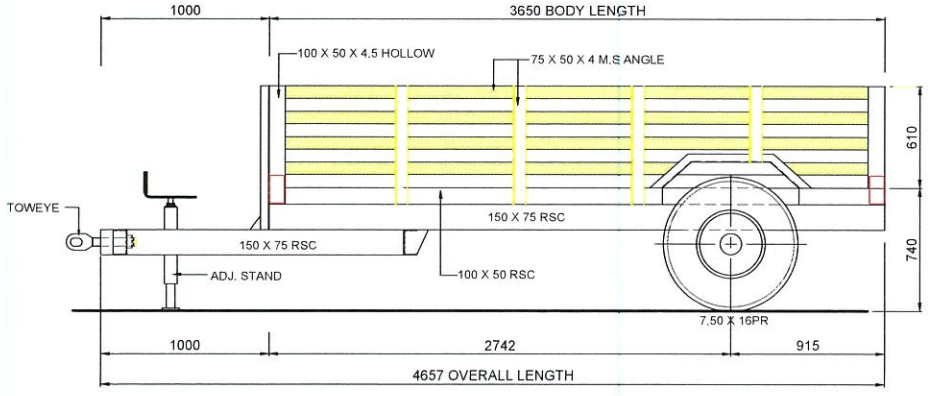

SIDE VIEW

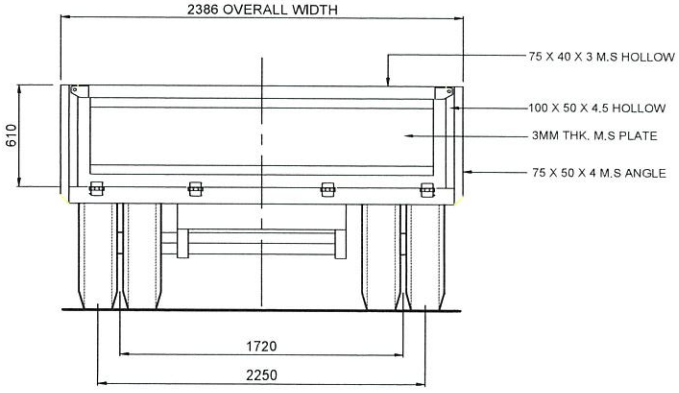

REAR VIEW