SCISSOR LIFT TRAILER 3.5 METRIC TONNE			
No.	**Description & Specification**	**Size**	**Remarks**
1	Dimension	3260mm (L) X 2134 mm (W) X 1257mm (H)	
2	Body Mild Steel (M.S Plate)	2.3mm, 9mm, 50 X 50mm angle	
3	Chasis Frame Rectangular Section (RSC)	125mm × 64 mm	
		75mm × 40 mm (Double)	
		100mm x 50mm	
4	Drawbar	150mm X 75mm	
5	Dumping System	Hydraulic cylinder hoist with rear pivot for tipping/dumping	
		2 units Double stage acting @ Single stage double acting hydraulic Ram with robust design c/w 1 length ply wire netting	
6	Dumping System	1 Single unit acting telescopic cylinder	
		Minimum tipping angle of trailer - 60deg	
7	Tires	Dual Type : 7.50 × 16, 8PR, come with 6 holes & rim new tyre	
8	Axle	Uses oil	
9	Railing	Overrun brake	
		Push Hand Lever & easily operated from divers seat of tractor	
10	Tail Gate	Top Hinged	
11	Guard Rail	Every angle (front, left, right and back)	
12	Accessories	Reflector/signal /tail light	
13	Painting	1 coat of RED protective & 2 final coats of paint to the TDM color scheme	
14	Bearing	32213 & 32215	
15	Additional safety to be include	"Besi Penahan" on the lower front of the trailer body to support the part so that it is not easily broken	
		Connecting head and hydraulic cable connecting tractor and control jack	
		Elbows to be mounted on both hydraulic cables to connect them to the control jack.	
		Using a bush on the trailer drawbar hook.	

Notes: *Drawbar equipped with towing eye. Suitable for towing by tractor or light truck. Heavy-duty design for bulk materials (sand, stone, palm fruit, soil)*



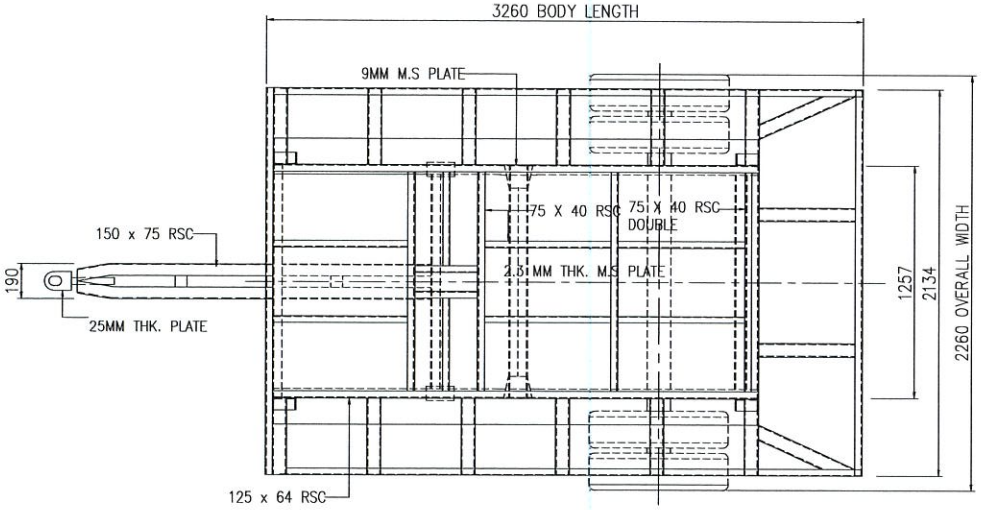

PLAN VIEW

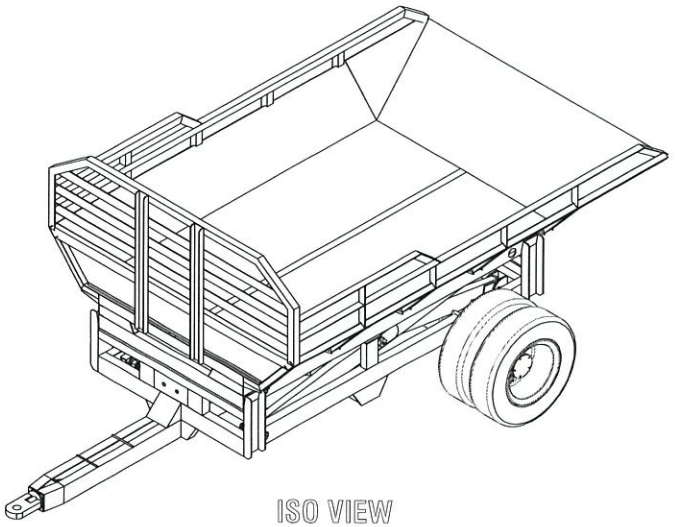

ISO VIEW

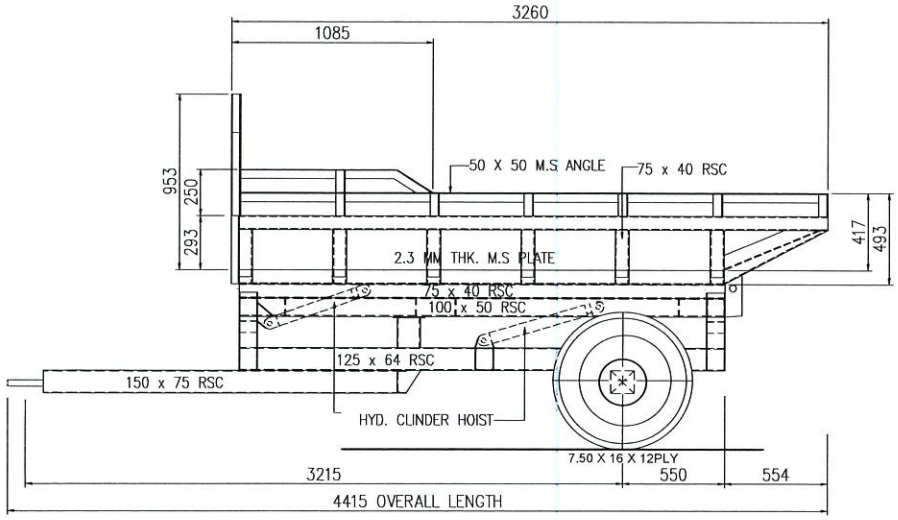

SIDE VIEW

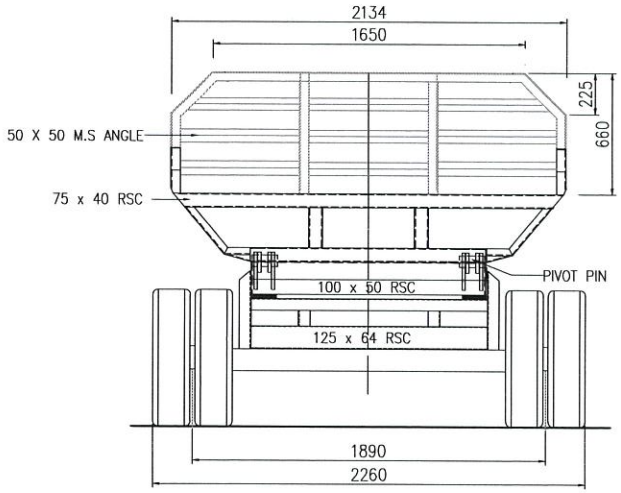

REAR VIEW