FERTILIZER TIPPING TRAILER 5 METRIC TONNE			
No.	**Description & Specification**	**Size**	**Remarks**
1	Dimension	4942 mm (L) X 2236 mm (W)	
2	Floor Plat Mild Steel (M.S Plate)	4mm	
3	RSC (Rectangular Steel Column)	150mm x 75 mm	
4	RCS (Rectangular Steel Section)	100mm X 50mm	
5	RCS (Rectangular Steel Section)	178mm x 75 mm	
6	RCS (Rectangular Steel Section)	175mm x 75 mm	
7	M.S Hollow	75mm X 40mm X 3mm	
8	Hollow	100mm X 50mm X 4.5mm	
9	M.S ANGLE RAILING	50mm X 50mm	
10	M.S PLATE TAILBOARD	3mm	
11	Tires	8.25 X 20 X 14PR	
		Rim with 8 holes.	
12	Others	Hydraulic tipping with rear pivot	
		Landing Leg	
		Toweye	

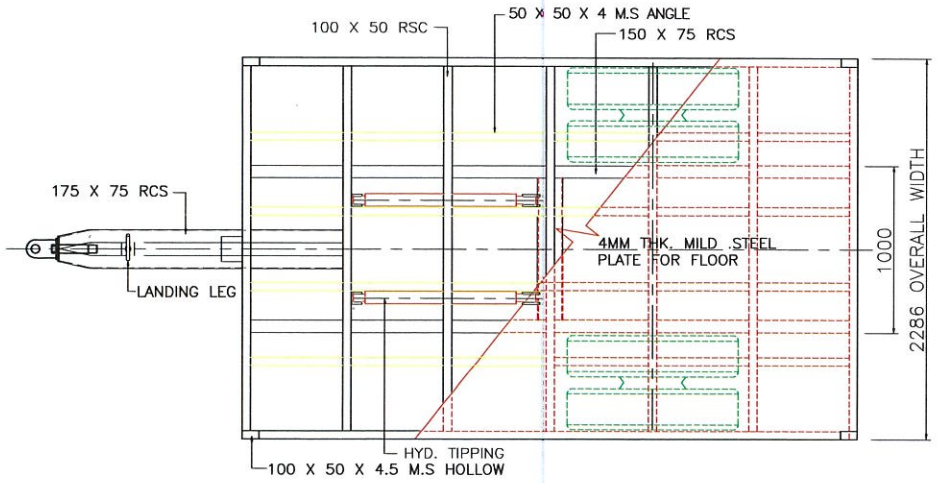

PLAN

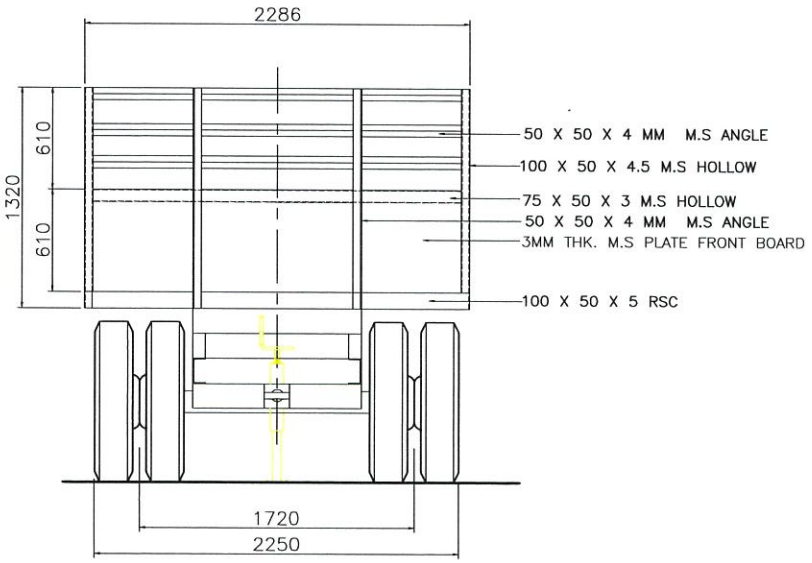

FRONT VIEW

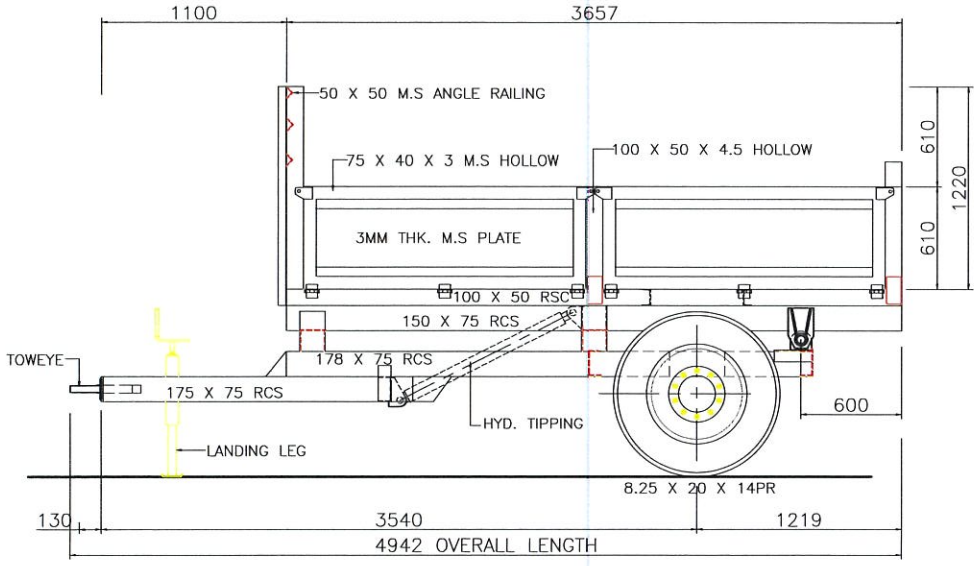

SIDE VIEW

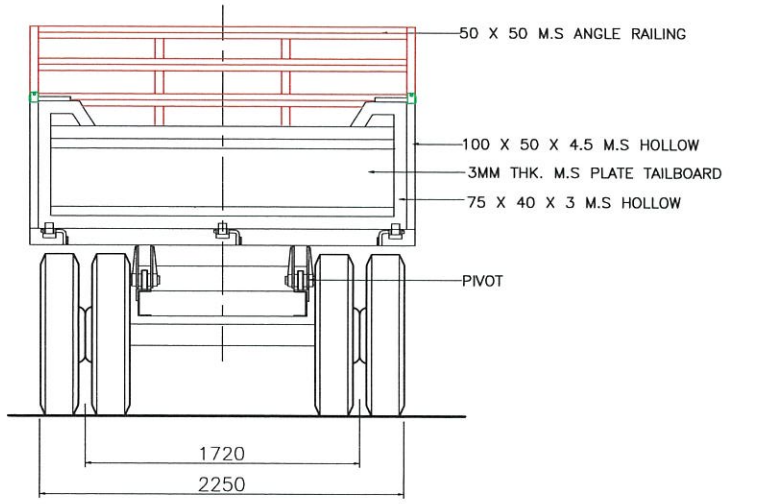

REAR VIEW